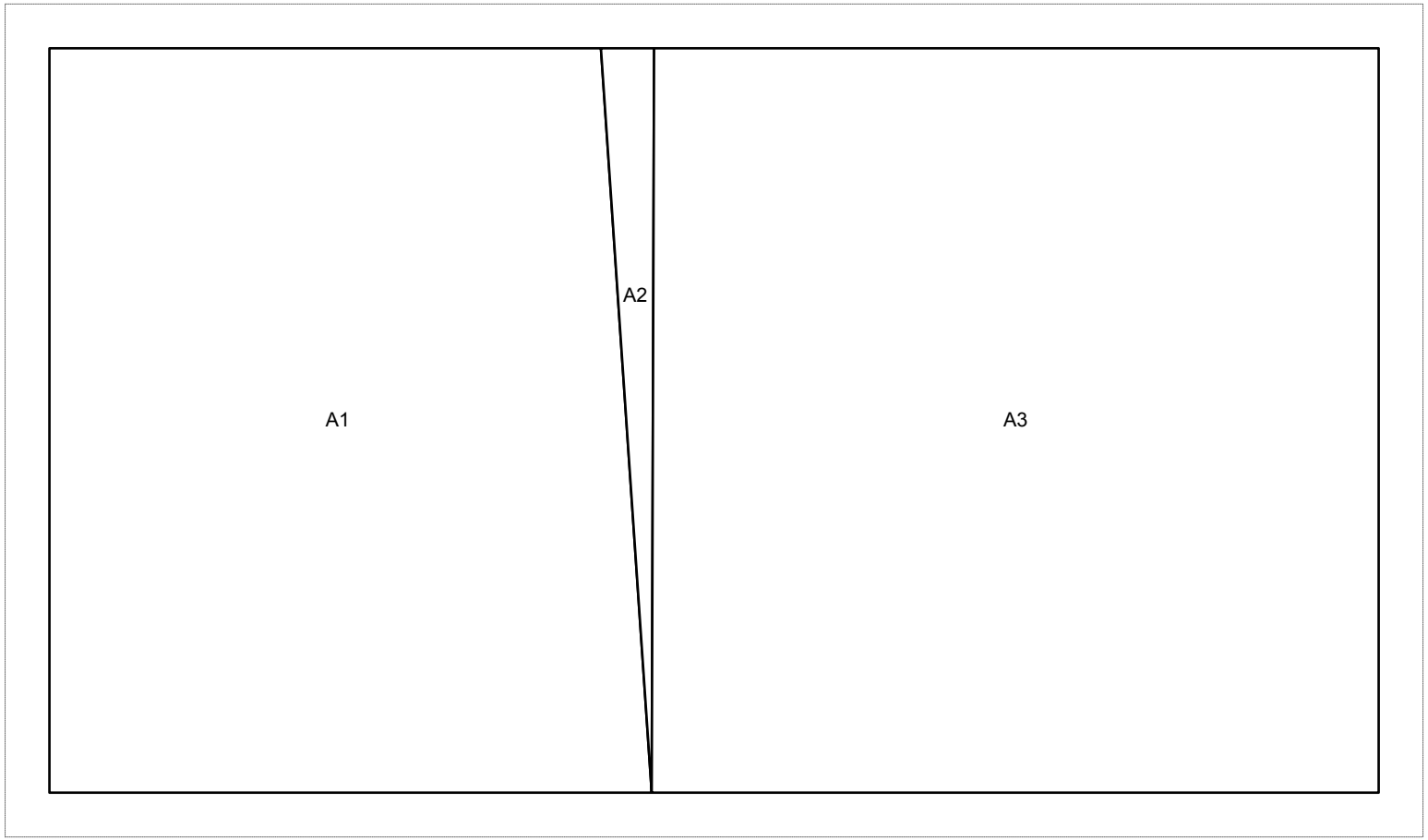

Pattern for "Unnamed" as 7.500 by 15.000 (inches) block, printed from EQ7!

Feather String by Stacey Day Quilts staceyinstitches.wordpress.com

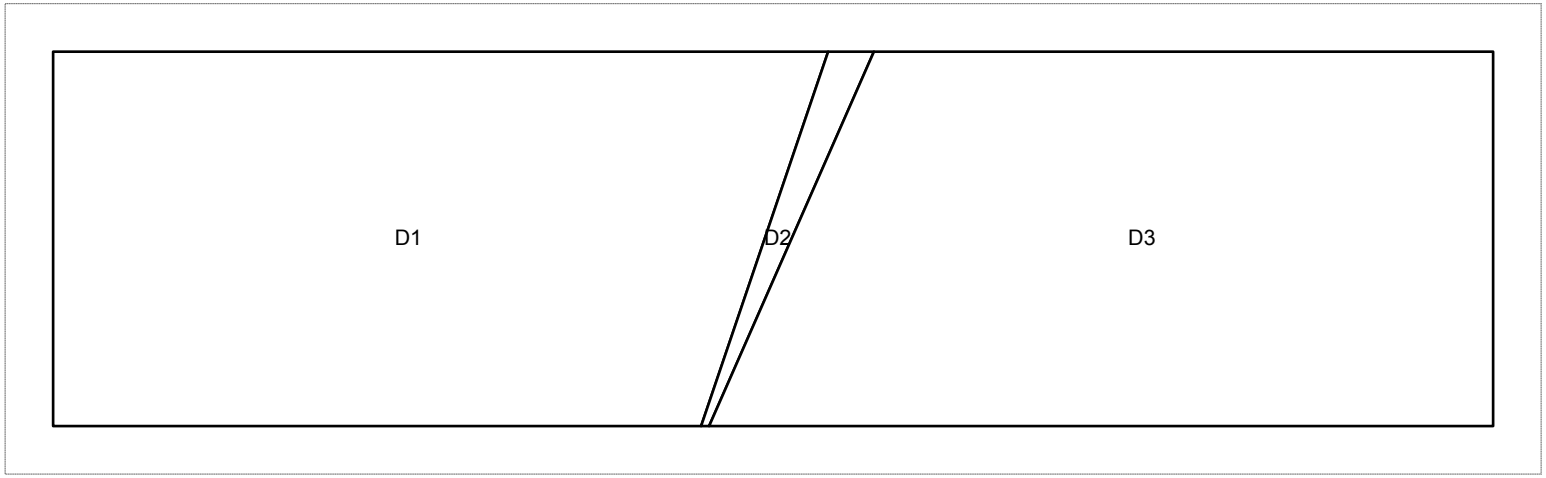

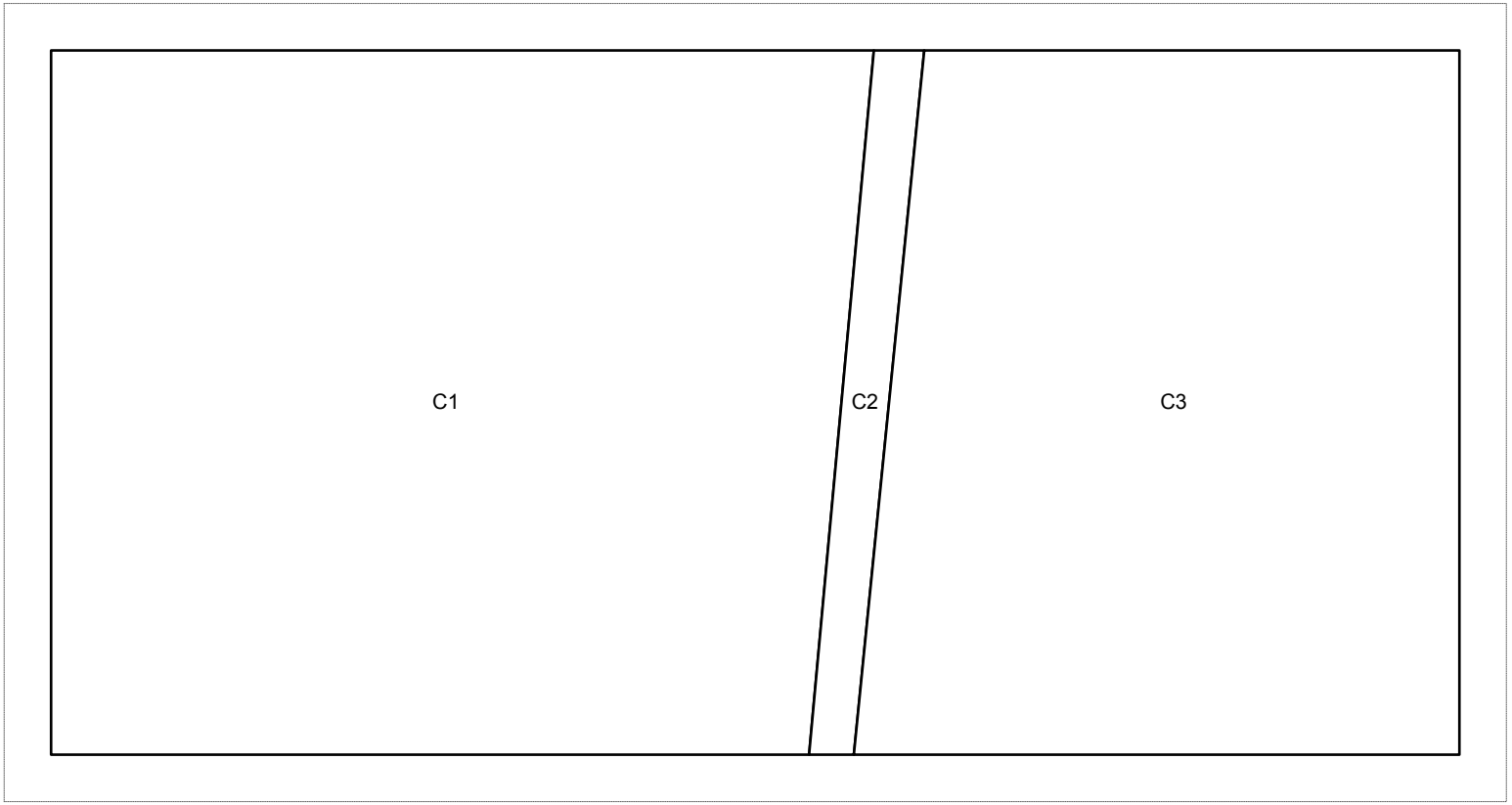
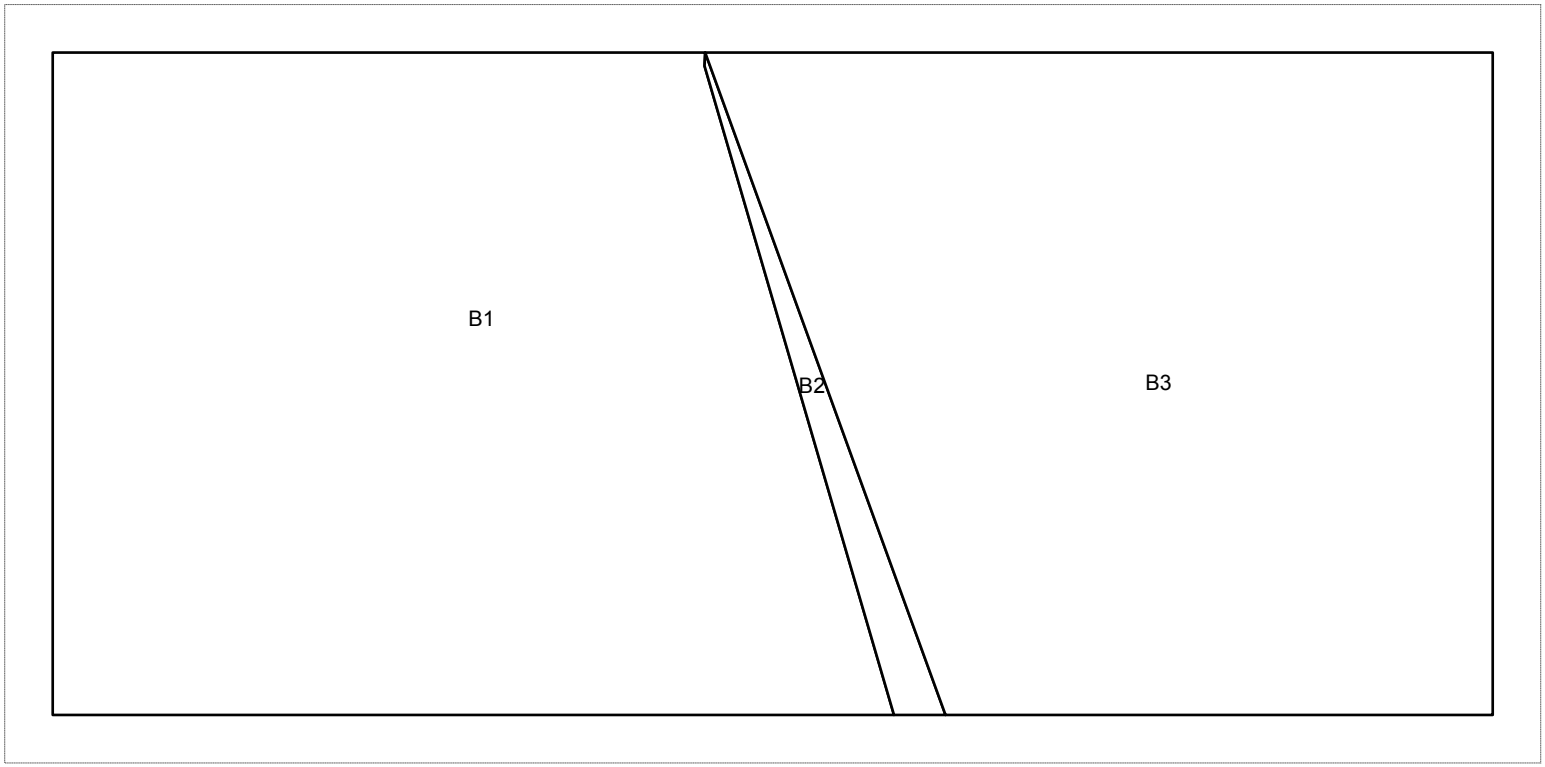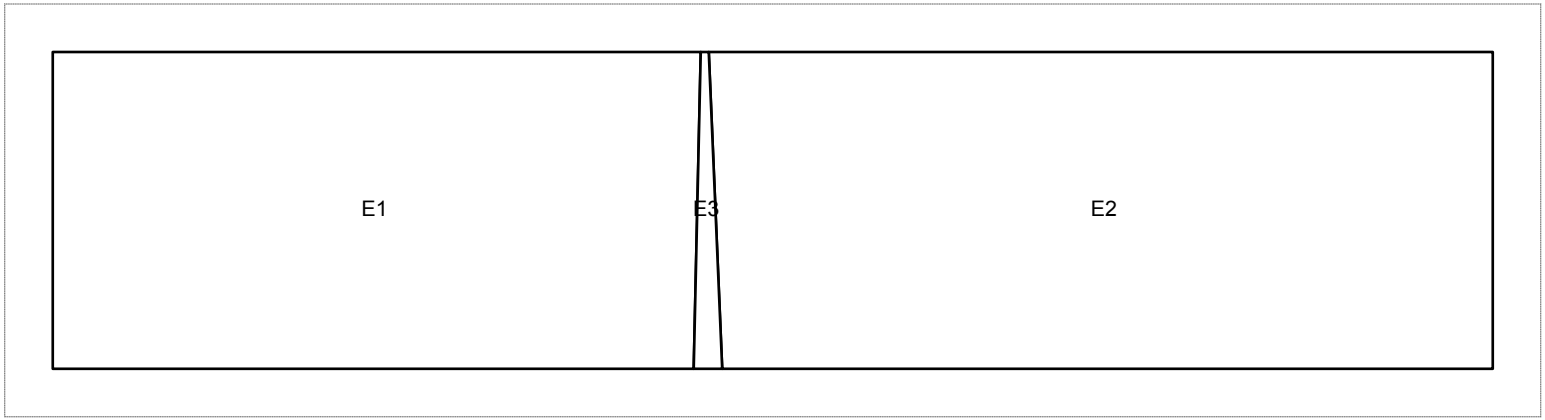
Feather String by Stacey Day Quilts staceyinstitches.wordpress.com